REV.	CHANGES	DRAWN	DATE	CHKD	DATE

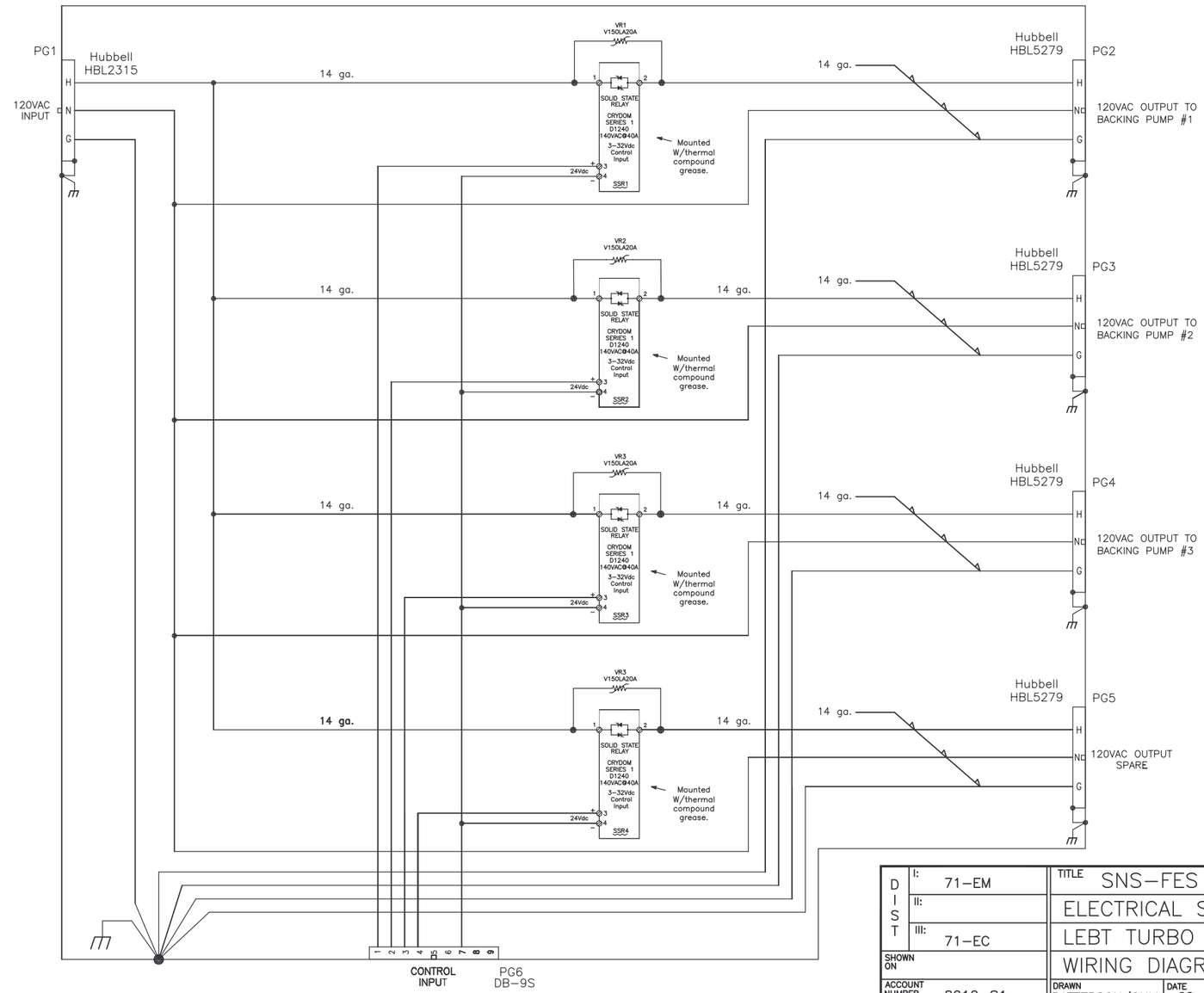

DIST I: 71–EM	TITLE SNS–FES ION SOURCE and LEBT		
II:	ELECTRICAL SYSTEMS		
III: 71–EC	LEBT TURBO BACKING PUMP CONTROL BOX FEE21		
SHOWN ON	WIRING DIAGRAM		
ACCOUNT NUMBER 8212–S1	DRAWN PATTERSON/CULL — DATE 02–12–02	LAWRENCE BERKELEY LABORATORY UNIVERSITY OF CALIFORNIA OFFICE OF ELECTRONICS ENGINEERING	
SERIAL NUMBER	CHECKED PETE CULL — DATE 03–04–02		
DATE ISSUED — NO REQD.	APPROVED A. RATTI — DATE	CATEGORY CODE FE3121 — SIZE 2 — DRAWING NO. 43X2302 W–1	REV. A
DATE REQD.	ENGINEER PETE CULL		
DEL. TO	SCALE NONE — ACAD2000i FILENAME 43X2302w1a UPDATED 03–13–02	SHEET 1 OF 1	